REVERSIBLE BRUSHLESS DC RIGHT-ANGLED GEARMOTOR

Model Number:

MMP BL87-435C-60V GRA81-029

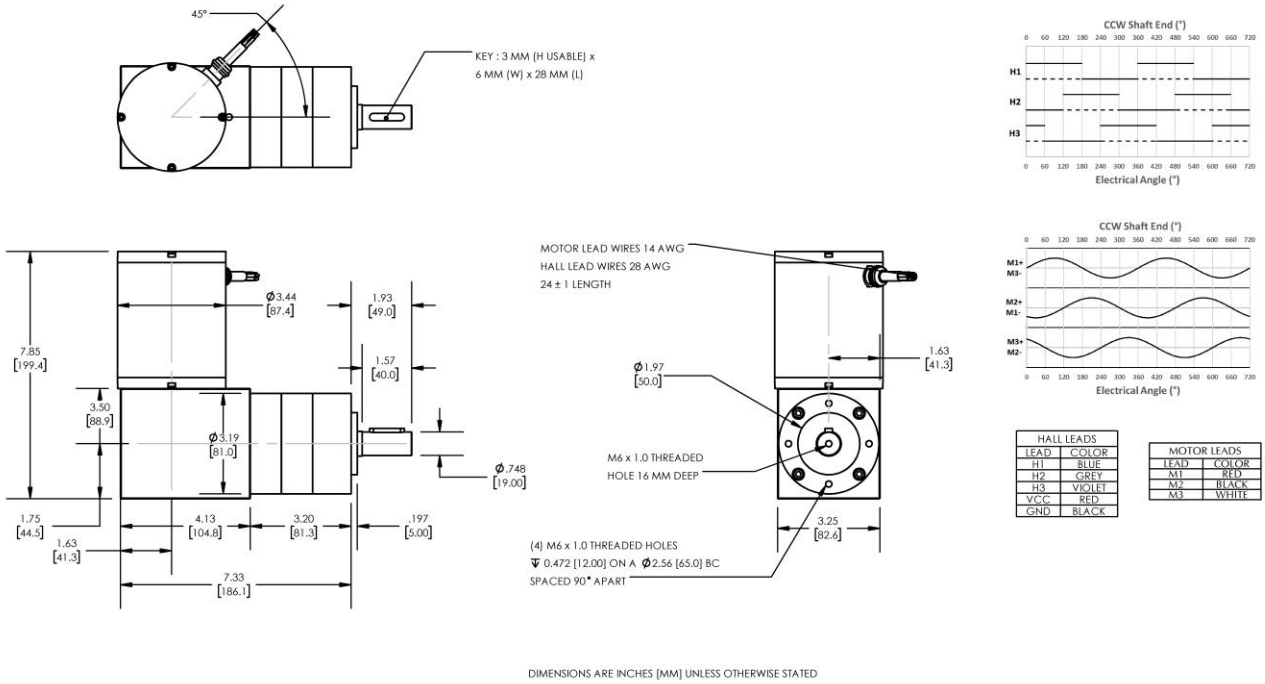

HALL LEADS	
LEAD	COLOR
H1	BLUE
H2	GREY
H3	VIOLET
VCC	RED
GND	BLACK

MOTOR LEADS	
LEAD	COLOR
M1	RED
M2	BLACK
M3	WHITE

PLANETARY GEARMOTOR OUTPUT PARAMETERS:	VALUE	UNITS	TOLERANCE
Gearhead Ratio (exact)	28.93 : 1		
Gearhead Shaft Output Speed (at full-load)	157	RPM	MAX
Gearmotor Rated Continuous Torque	388	In-Lbs	MAX
Gearmotor Rated Peak Torque	1062++	In-Lbs	-----
Gearhead Standard Backlash	33	Arc Minutes	MAX
Gearhead Efficiency	75%	-----	-----
Output Shaft Radial Load Capacity	135	Lbs	MAX
Output Shaft Axial Load Capacity	27	Lbs	MAX
Gearmotor Total Weight	16	Lbs	MAX

++ All Peak Torque values are dependent upon duty. Contact our sales office for details.

DC MOTOR PERFORMANCE PARAMETERS:	VALUE	UNITS	TOLERANCE
Rated DC Voltage	60	DC VOLTS	-----
Rated Continuous Current	20.8	AMPERES	-----
No-Load Speed	5607	RPM	MAX
Rated Speed	4551	RPM	+/- 15%
Rated Continuous Power Out	963	WATTS	+/- 15%
Rated Continuous Torque	286	OZ-IN	-----
Peak Torque (motor only)	1066	OZ-IN	-----
No-Load Current	1.06	AMPERES	MAX
Back EMF Constant (Ke)	10.7	V/KRPM	+/- 10%
Torque Constant (Kt)	14.5	OZ-IN/AMP	+/- 10%
DC Armature Resistance	0.54	OHMS	+/- 15%
Armature Inductance	0.46	mH	+/- 15%
Armature temperature	155	DEG. C	MAX

NOTES:

- ENCODER & BRAKE OPTIONS AVAILABLE – FOLLOW THIS LINK FOR DETAILS
- NEMA MOUNTING FLANGE OPTION AVAILABLE – FOLLOW THIS LINK FOR DETAILS